SHIMANO DEORE Mega-9 Rapidfire Lever (2-Finger)

ST-M510-S Silver Version
ST-M510-L Black Version

For Left Hand

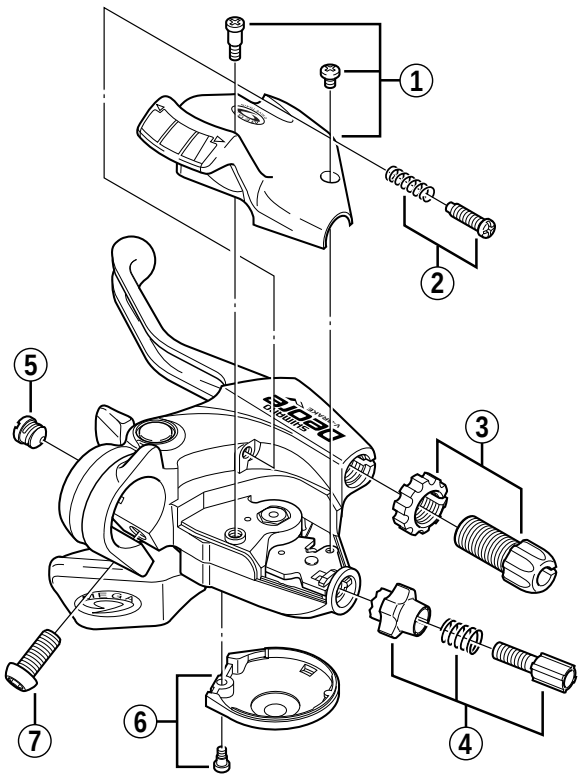

For Right Hand

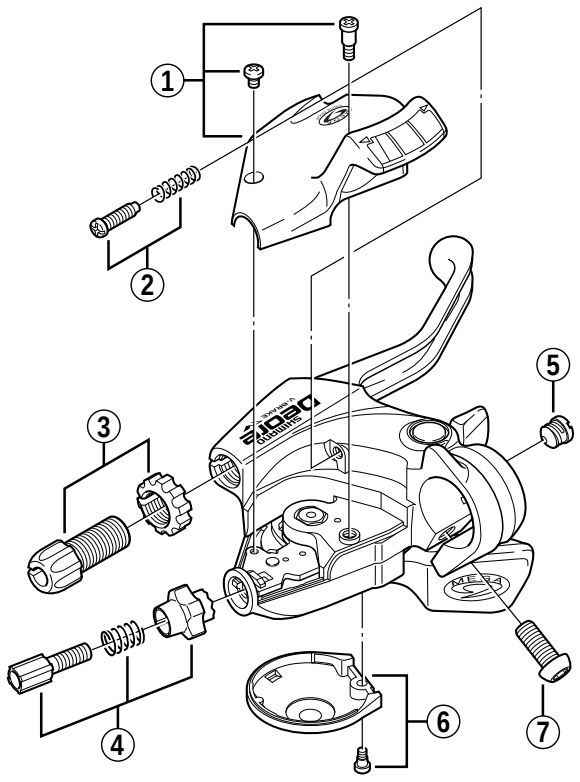

ITEM NO.	SHIMANO CODE NO.	DESCRIPTION	INTERCHANGE-ABILITY ST-M570	ST-MC18	ST-EF33	SL-M510
1	**Y-6C0 98010**	R.H. Indicator Unit				
	Y-6C0 98020	L.H. Indicator Unit				
2	**Y-8XV 98020**	Reach Adjusting Screw (M4 x 14.5) & Spring				
3	**Y-8XV 98010**	Brake Cable Adjusting Bolt (M10 x 20) & Nut	B	B	B	
4	**Y-6CD 98070**	Shifting Cable Adjusting Bolt Unit	A		B	A
5	**Y-6CD 33000**	Inner Hole Cap	A			A
6	**Y-6CZ 98050**	Main Lever Cover & Fixing Screw				A
7	**Y-89B 13500**	Clamp Bolt (M6 x 14.8)	B		B	

9907-1899

The table indicates the adaptability of conventional parts to ST-M510-S / M510-L.
A : Same parts.
B : Parts are usable, but differ in materirals, appearance, finish, size, etc.
Absence of mark indicates non-interchangeability.

Specifications are subject to change without notice.

SHIMANO